praxi.

**STC:** 31, 32 & 35

system consistency
with all Praxi walls

# FRAMELESS LITE GLASS DOOR

## System description

A lightweight and delicate form where the glass door panel creates a continuity effect in glass walls.

- universal mounting methods in any type of Praxi frame - both single and double glazed walls
- many configuration options - the door can be additionally equipped with an electric strike, surface door closer and an acoustic drop-down seal,

## Specification

| | |
|---|---|
| Durability* | Class 6 (200 000 cycles) |
| Type of filling (mm) | Tempered 10,12.7 |
| Max height | 9'-6" |
| Max width | 3' - 3 3/8" |
| Acoustic insulation | STC: 31, 32 & 35 |
| Materials / finish | Anodized aluminum / Aluminum RAL |

* According to PN-EN 12400:2004
** the use of a higher leaf requires consultation

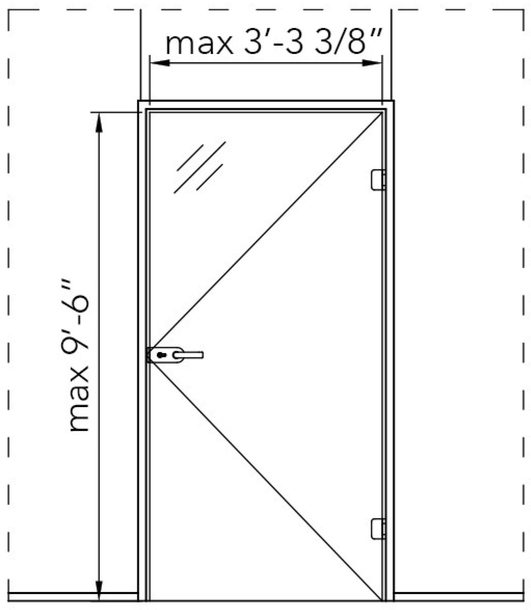


## Acoustic insulation

| Glass [mm] | $R_W$ [STC] | C [STC] | $R_{A1}$ [STC] | $R_{A1,R}$ [STC] |
|---|---|---|---|---|
| TEMP 8 | 31 | -1 | 30 | 29 |
| TEMP 10 | 32 | -2 | 30 | 29 |
| TEMP 12.7 | 35 | -2 | 33 | 32 |

## Drop down seal
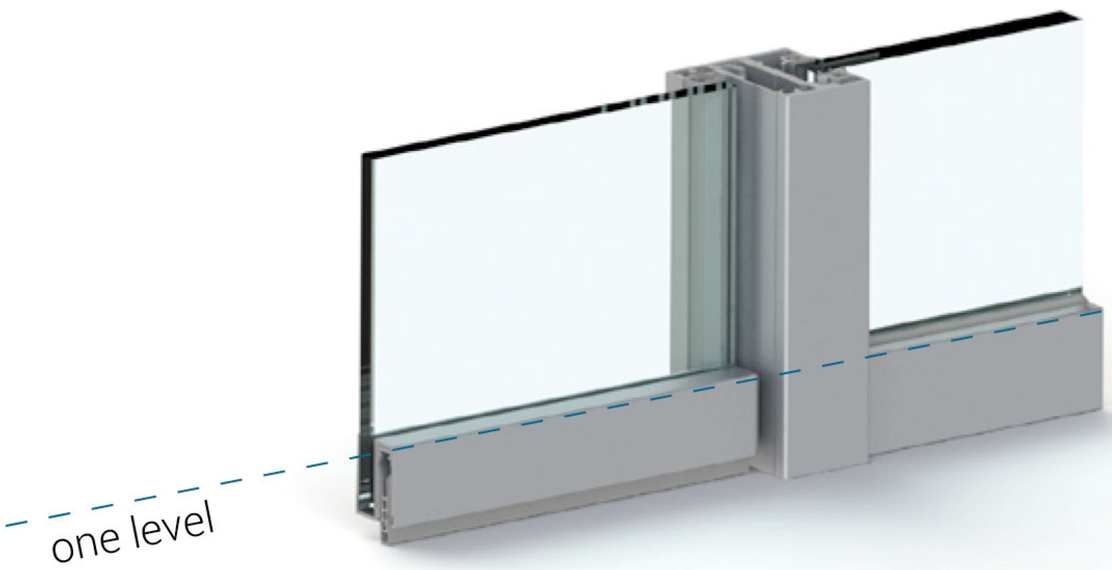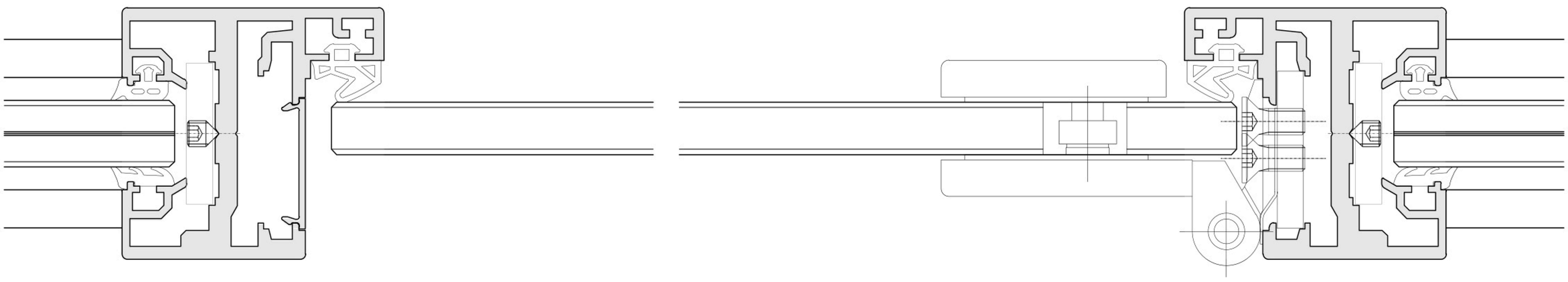
The system provides for the possibility of using a drop-down seal, which seals the threshold space when the door is closed. The profile mounted on the lower edge of the leaf corresponds to the dimensions of the profile fixing the fixed glazing.