praxi.

STC: 40 - 55

35 mm

Aesthetic profile

PRAXI MUTE

System features

A double-glazed system dedicated for rooms meant to host confidential talks, such as directors' offices and conference rooms

- the highest acoustic insulation parameters – Even up to 55 STC for office rooms requiring the highest level of privacy,
- mounting profile 35 mm high, consistent with all Praxi Office products,
- quick and convenient assembly thanks to a system of spacers and special elements protecting glass during installation,

praxi.

Specification

	PRAXI MUTE	PRAXI MUTE GRID
Type of glass (mm)	Tempered 10, 12; Laminated 55.X, 66.X, 88.2	Tempered 8, 10, 12; Laminated 44.X, 55.X, 66.X, 88.2
Max. height	11′ - 2″	13′ - 1 1/2″
Acoustic insulation	STC: 40 -50	STC: 46 -55
Material / finish	Anodized aluminium / RAL aluminium	

Acoustic insulation

Wall variant		Glass [mm]	R_W [STC]	C [STC]	R_{A1} [STC]
All-glass	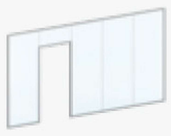	TEMP 10 / TEMP 10	40	-2	38
		LAM 55.1 / 55.1	40	-2	38
		TEMP 10 / LAM 55.1	42	-1	41
		LAM 551.1 / LAM 66.2	43	-2	41
		LAM 66.2 / LAM 66.2	43	-1	42
		LAM 66.2 Si* / LAM 55.1	44	-2	42
		LAM 66.2 Si / LAM 55.2 Si*	46	-2	44
		LAM 66.2 Si* / LAM 66.2 Si*	47	-1	46
		LAM 66.2 Si / LAM 66.2 Si*	51	-2	49
		LAM 88.2 Si* / LAM 88.2 Si*	50	-1	49
endoGrid	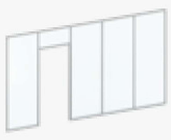	LAM 66.2 / LAM 66.2	48	-3	45
		LAM 66.2* / LAM 66.2 Si*	51	-3	48
		LAM 66.2 Si* / LAM 66.2 Si*	55	-3	52
	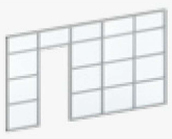	LAM 66.2 / LAM 66.2	52	-2	50
		LAM 66.2 Si* / LAM 66.2 Si*	55	-2	53
egzoGrid	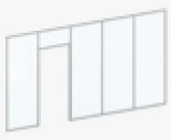	LAM 44.1 / LAM 55.1	46	-3	43
		LAM 66.2 Si* / LAM 66.2 Si*	50	-1	49
	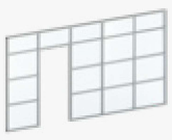	LAM 44.1 / LAM 55.1	49	-2	47
		LAM 66.2 Si* / LAM 66.2 Si*	42	-1	41

endoGrid - internal muntins
egzoGrid - external muntins

*Si - Saint-Gobain Glass Stadip Silence

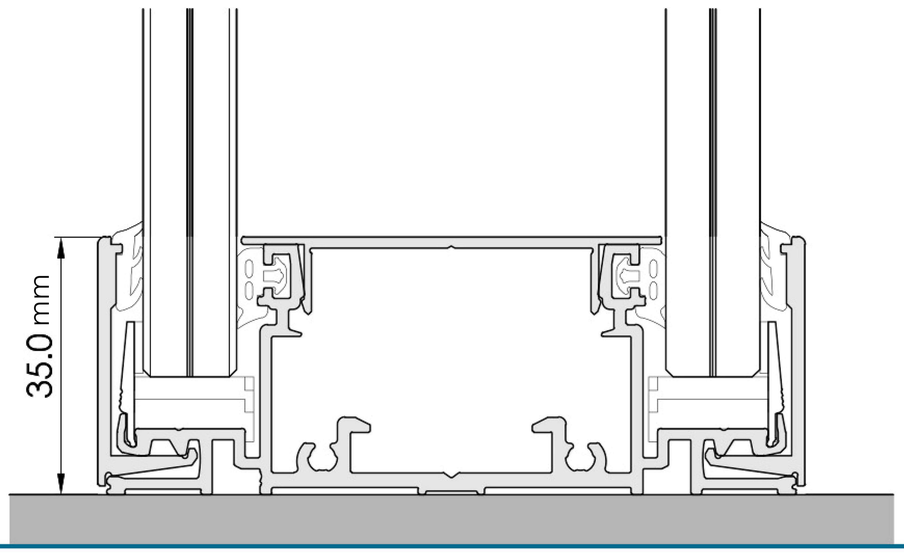

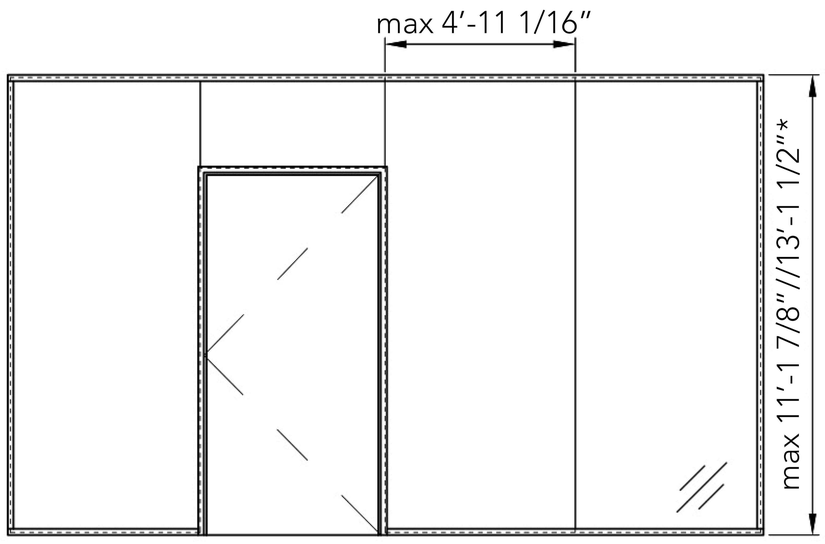

*depending on the system version