praxi.

STC: 34 - 38

system consistency
with all Praxi walls

FRAMED SLIM DOORS

System description

Created for lightweight design projects.
They achieve high acoustic insulation parameters through acoustic glass.

- universal mounting methods in any type of Praxi Office frame - both single and double glazed walls as well as in traditional concrete wall,
- increased acoustic insulation parameters through the use of IsoSound damping filler that reduces sound penetration inside the profile,
- the narrow structure of the aluminum door frame - only 68 mm wide - creates a light and delicate visual effect, harmonizing with the permanent glazing profiles,
- many finishing options - aluminum profiles are available in a wide range of colors of anodic or varnish coating with corresponding color selection of the seals.

praxi.

Specification

Durability*	Class 6 (200 000 cycles)
Type of filling (mm)	LAM 44.1, 44.2, 55.1, 55.2
Max height	10'-0"
Max width	3' -3 3/8"
Acoustic insulation	STC: 34 - 38
Materials / finish	Anodized aluminum / Aluminum RAL

* According to PN-EN 12400:2004

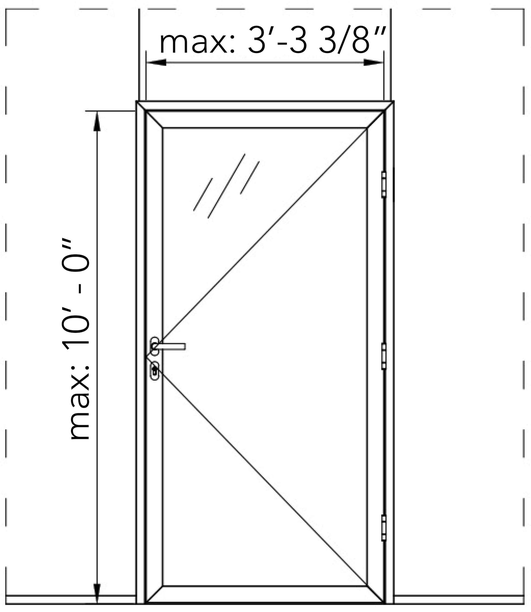

Acoustic insulation

Glass [mm]	R_W [STC]	C [STC]	R_{A1} [STC]	$R_{A1,R}$ [STC]
LAM 44.1	34	-1	33	31
LAM 44.1 + IsoSound	35	-1	34	32
LAM 44.2 Si*	36	0	36	34
LAM 44.2 Si* + IsoSound	37	-1	36	34
LAM 55.1 + IsoSound	36	-1	35	33
LAM 55.2 Si* + IsoSound	38	-1	37	35

*Si - Saint-Gobain Glass Stadip Silence

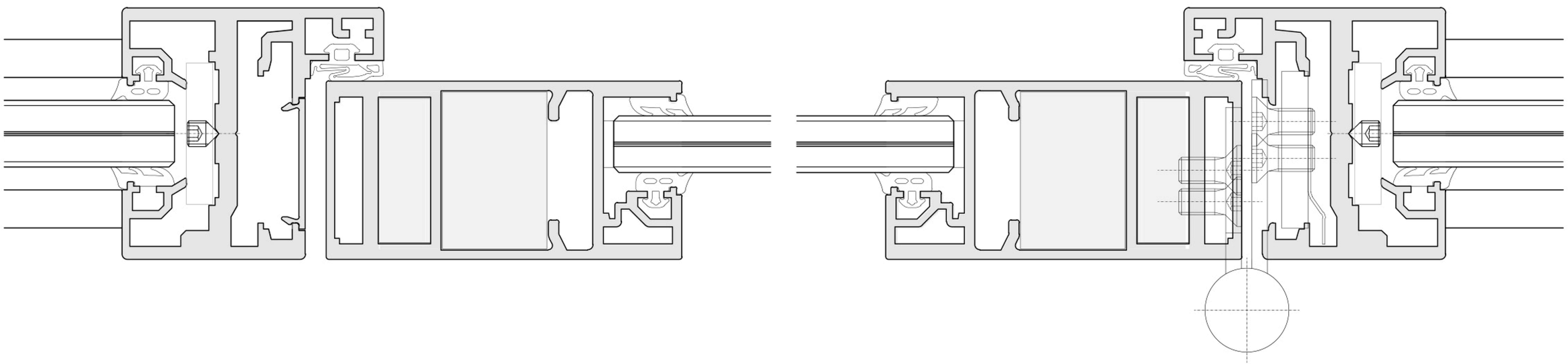

There is also a version with a hidden hinge in the door frame.