praxi.

STC: 32 - 40

35 mm

Aesthetic profile

PRAXI SILENT

System features

A single-glazed system meant for typical office spaces

- small 35 mm mounting profile, consistent with all Praxi Office products,
- quick and convenient assembly thanks to a system of spacers and special elements protecting glass during installation.

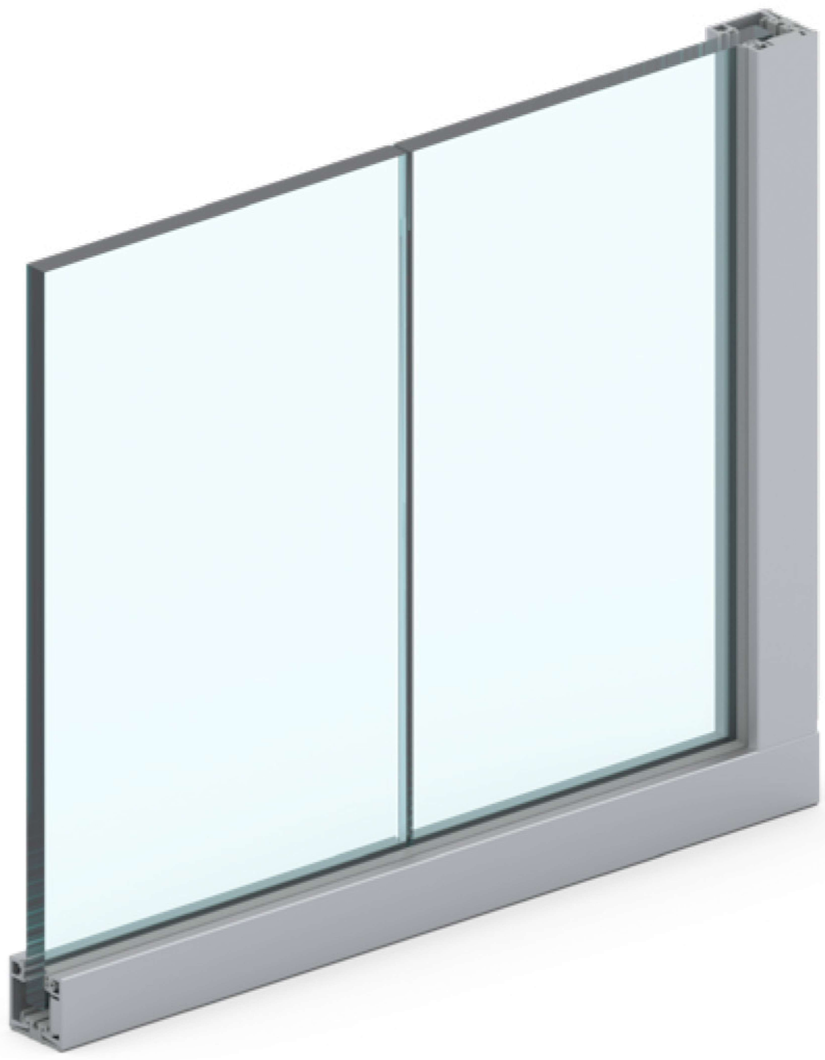

praxi.

Specification

	PRAXI SILENT	PRAXI SILENT GRID
Type of glass (mm)	Tempered 10, 12; Laminated 55.X, 66.X, 88.2, 106.2	Tempered 10, 12; Laminated 55.X, 66.X, 88.2
Max. height	10'-6" / 11'-2"*	11'-2"
Acoustic insulation	STC: 32 -40	STC: 35 -40
Material / finish	Anodized aluminium / RAL aluminium	

* depending on the applied glass

Acoustic insulation

Wall variant		Glass [mm]	R_W [STC]	C [STC]	R_{A1} [STC]
All-glass	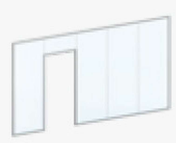	TEMP 10	32	-2	30
		TEMP 12.7	34	-2	32
		LAM 55.1	34	-2	32
		LAM 66.2	36	-2	34
		LAM 66.2 Si*	38	-1	37
		LAM 88.2 Si*	39	-1	38
		LAM 106.2 Si*	40	-1	39
Grid	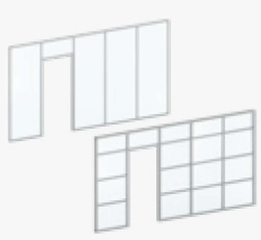	LAM 55.1	35	-1	34
		LAM 66.2	36	-1	35
		LAM 66.2 Si*	39	-1	38
		LAM 88.2 Si*	40	-1	39
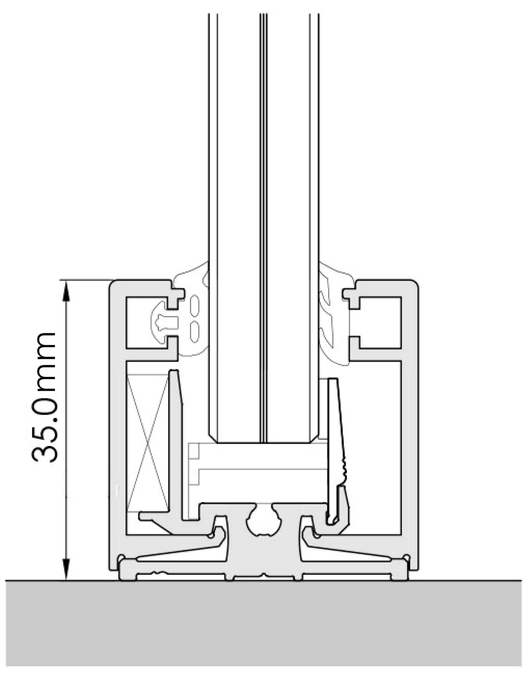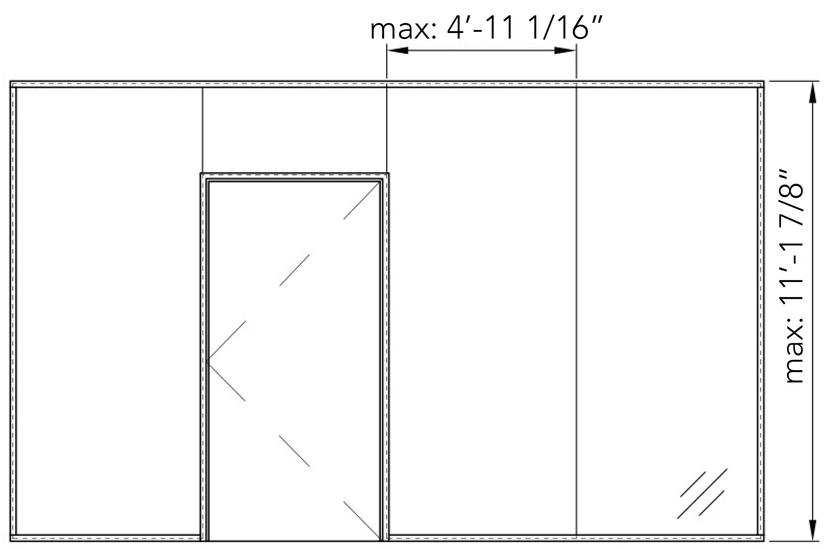
*Si - Saint-Gobain Glass Stadip Silence